42G06SW0004 10 RYKERT

010

DIAMOND DRILLING

REPORT NO: #10

TOWNSHIP: RYKERT

WORK PERFORMED FOR: Golden Trio Minerals Ltd.

RECORDED HOLDER: Same as Above (xx)
: Other ( )

Claim No.	Hole No.	Footage	Date	Note
944606 ✓	GTO-6	72.8m	Feb/88	(1)
920902 ✓	GTO-15	78.9m	Feb/88	(1)
	GTO-16	91.1m	Feb/88	(1)
934651 ✓	GTO-17	182.6m	Feb/88	(1)
933160 ✓	GTO-24	91.1m	Feb/88	(1)
945171 ✓	GTO-~~24~~25	61.3m	Feb/88	(1)
945924 ✓	GTO-31	73.5m	Feb/88	(1)
920932 ✓	GTO-35	94.2m	Feb/88	(1)

745.5

NOTES: (1) W8906-447 date filed Oct/89

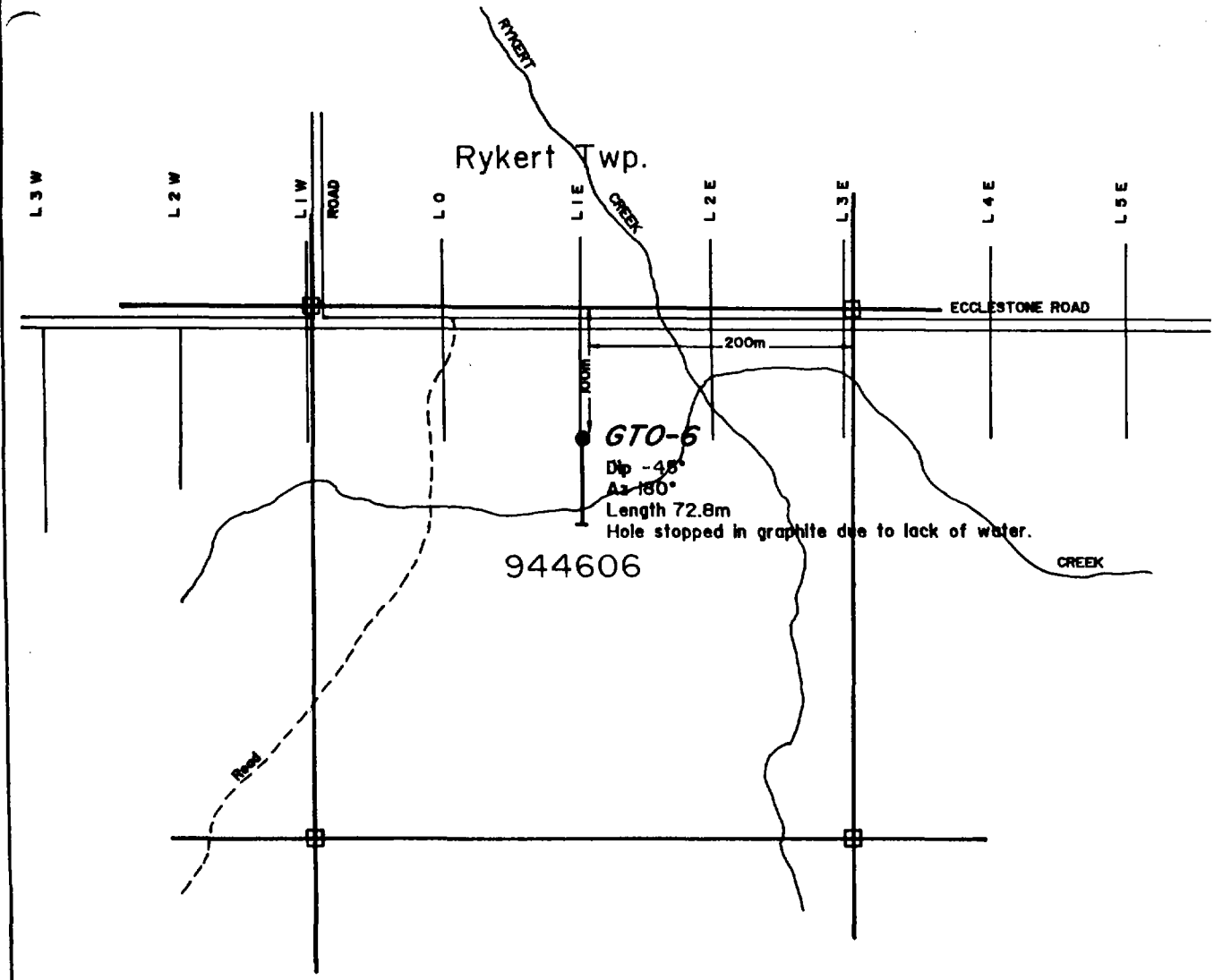

REVISIONS	DURHAM GEOLOGICAL SERVICES INC.		
	For: GOLDEN TRIO MINERALS LTD		
	Title: OBA PROJECT Diamond Drill Hole Location Map GTO-6		
	Date: JUNE 1988	Drawn: CG	Scale: 1:5000
	NTS:	Approved:	Fig.:

DURHAM GEOLOGICAL SERVICES INC.
Box 734
Timmins Ontario
P4N 7G2

DIAMOND DRILL HOLE LOG

PROJECT: Golden Trio - Oba

AREA: Rykert Twp.

CLAIM NUMBER: 944606

CORE SIZE: BQ

DRILLED BY: Falcon Drilling Ltd.

LOGGED BY: A. Moore

CORE STORED AT: Camp 95

OBJECTIVE: Airborne EM # 2270B

HOLE NUMBER: GTO-6

LOCATION: 100E, 085S

AZIMUTH: 180°

DIP: -45°

DATE: February 8-9, 1988

CASING: 9.1m

LENGTH: 72.8 m

ACID TEST: -44 @ 72m

Henry P Kiellein for A. Moore

DURHAM
GEOLOGICAL
SERVICES INC.

DIAMOND DRILL HOLE LOG

GTO-6

METERAGE		ROCK TYPE AND DESCRIPTION	Core Angle to Axis	% Sul-phides	SAMPLE				ANALYTICAL RESULT					
From	To				Number	From	To	Length (m)	Au ppb	As ppm	Pb ppm	Zn ppm	Cu ppm	Ag ppm
0	9.1	CASING												
9.1	11.7	BOULDERS AND GRAVEL												
		- granite, diabase and metasediments												
11.7	57.0	SILICIFIED AND AMPHIBOLITIZED METASIDEMENTS	70°											
		f.g.												
		- medium grey greywacke with m.g.												
		- metacrysts of amphibole												
		- weakly to moderately foliated @ 70° to C.A.												
		- @ 19.5m a few light green chlorite bands												
		- moderately to strongly silicified; cherty												
		from about 20m onwards												
		- narrow quartz and quartz-carbonate												
		stringers and veins up to 20cm are common												
		23.4-24.5 - quartz-carb. veining py specks	70°	0.5%	6562	23.4	24.5	1.1	9					
		34.8-35.4 - quartz-carb. veining py specks	70°	0.5%	6599	34.8	35.4	0.6	6					3.7
		55.1-56.6 - massive; medium grained, weakly	70°	1.0%	6600	55.1	56.6	1.5	2					0.8
		carbonated and silicified,												
		1% po in blebs, trace pyrite												
		56.6-57.0 - 1% pyrite, trace graphite		1.0%	6601	56.6	57.0	0.4	1					0.7
		55.5 - core is broken												

DURHAM GEOLOGICAL SERVICES INC.

DIAMOND DRILL HOLE LOG

GTO-6

METERAGE		ROCK TYPE AND DESCRIPTION	Core Angle to Axis	% Sul-phides	SAMPLE				ANALYTICAL RESULT					
From	To				Number	From	To	Length (m)	Au ppb	As ppm	Pb ppm	Zn ppm	Cu ppm	Ag ppm
57.0	60.7	GRAPHITIC ARGILLITE												
		- f.g. medium grey to black		1%	6602	57.0	57.9	0.9	2					1.0
		- up to 10% graphite; core is very blocky due		2%	6603	57.9	59.4	1.5	2					1.0
		to brecciation - numerous thin quartz-carb		2%	6604	59.4	60.7	1.3	3					0.9
		stringers												
		- foliation is normally @ 45° to C.A. but												
		brecciated and folded sections are up to												
		0° to C.A.												
		- possibly a fault breccia												
60.7	71.2	SILICIFIED METASEDIMENTS f.g.; med. grey		1-3%	6605	60.7	62.5	1.8	4					1.6
		- intensely brecciated and silicified with		1-3%	6606	62.5	63.7	1.2	1					1.8
		moderate carb alteration - graphite content		1-3%	6607	64.0	65.5	1.5	2					1.0
		increases to depth		1-3%	6608	65.5	66.5	1.0	1					1.0
		- possibly a fault breccia		1-3%	6609	66.5	67.1	0.6	2					1.2
		- py>>po 1-3% as cavity in fillings and blebs		1-3%	6610	67.1	68.0	0.9	3					1.1
		- from 63.7 to 64.0 - missing core		1-3%	6611	68.0	69.5	1.5	4					0.9
		67.1 - core is less blocky and brecciated		1-3%	6612	69.5	71.2	1.7	4					1.0
		- foliation is 40° to C.A.												
71.2	72.8	GRAPHITIC METASEDIMENTS: black f.g.		0.5%	6613	71.2	73.8	1.6	11					1.3
		- up to 90% graphite; 0.5% py in nodules and disseminations												

DURHAM
GEOLOGICAL
SERVICES INC.

DIAMOND DRILL HOLE LOG

GTO-6

METERAGE		ROCK TYPE AND DESCRIPTION	Core Angle to Axis	% Sul-phides	SAMPLE				ANALYTICAL RESULT					
From	To				Number	From	To	Length (m)	Au ppb	As ppm	Pb ppm	Zn ppm	Cu ppm	Ag ppm
	72.8	Hole stopped due to water shortage												
		E.O.H.												

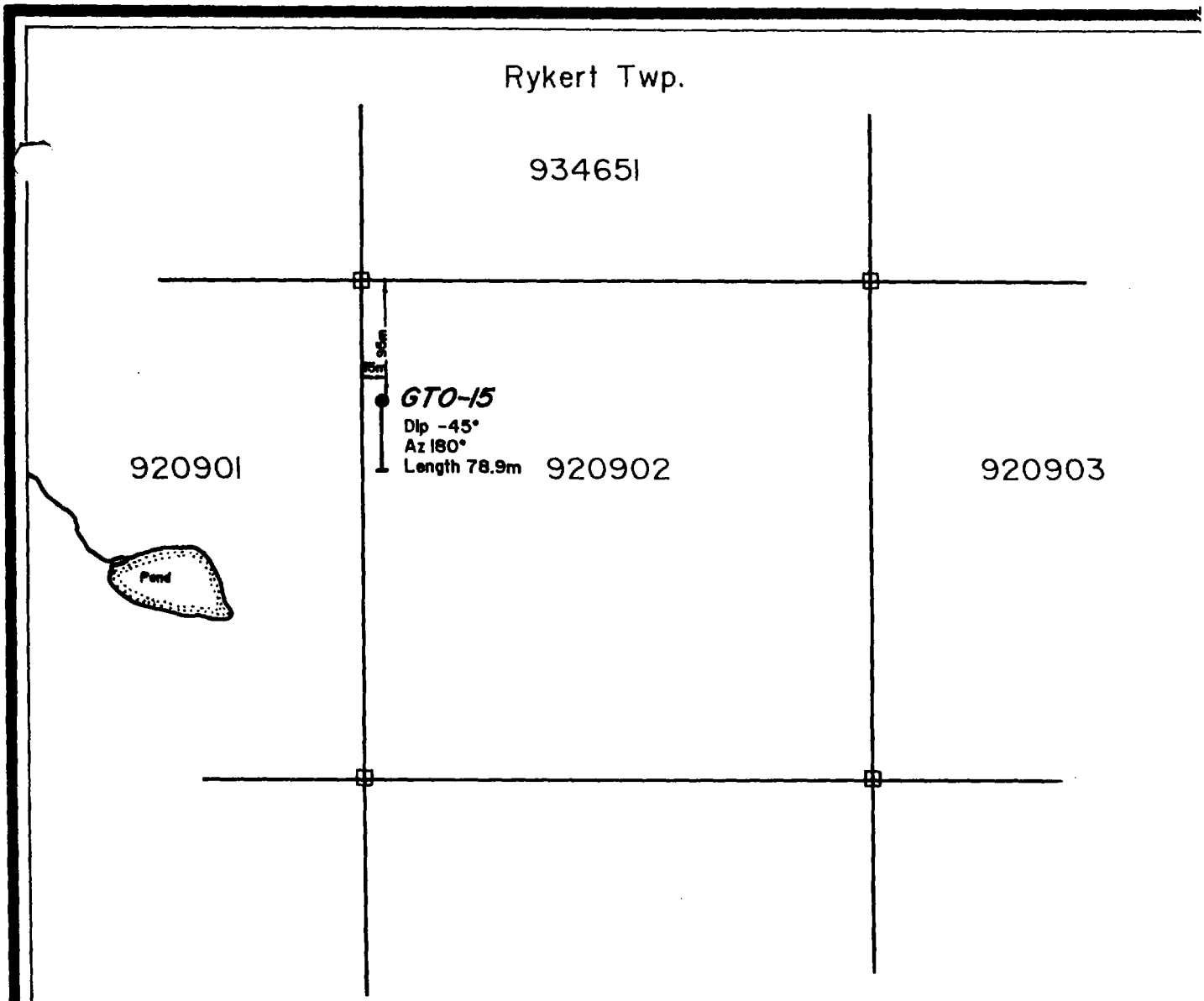

REVISIONS	DURHAM GEOLOGICAL SERVICES INC.		
	For: GOLDEN TRIO MINERALS LTD		
	Title: OBA PROJECT Diamond Drill Hole Location Map GTO-15		
	Date: JUNE 1988	Drawn: CG	Scale: 1:5000
	NTS:	Approved:	Fig.:

DURHAM GEOLOGICAL SERVICES INC.
Box 734
TIMMINS, ONTARIO
P4N 7G2

DIAMOND DRILL HOLE LOG

PROJECT: Golden Trio - Oba Project

AREA: Rykert East

CLAIM NUMBER: 920902

CORE SIZE: BQ

DRILLED BY: Falcon Drilling Ltd.

LOGGED BY: B Barnes

CORE STORED AT Camp 95

OBJECTIVE: Test MaxMin Anomaly

HOLE NUMBER: GTO-15

LOCATION: 4000W, 1450S

AZIMUTH: 180°

DIP: -45°

DATE: February 6-7, 1988

CASING: 22.9m

LENGTH: 78.9m

ACID TEST -44° @ 78.9m

Henry P Hutten for B. Barnes

DURHAM
GEOLOGICAL
SERVICES INC.

DIAMOND DRILL HOLE LOG GTO-15

METERAGE		ROCK TYPE AND DESCRIPTION	Core Angle to Axis	% Sul-phides	SAMPLE				ANALYTICAL RESULT					
From	To				Number	From	To	Length (m)	Au ppb	As ppm	Pb ppm	Zn ppm	Cu ppm	Ag ppm
0	22.9	CASING AND OVERBURDEN												
22.9	38.7	MAFIC VOLCANOGENIC SEDIMENT	63°	<1%	6502	24.6	25.6	1.0	4					
		- mottled and streaked dark green and white												
		chloritic amphibole and stretched plagio-												
		close and minor quartz												
		- speckled with fine secondary ?Py		<1%										
		24.3 - 5cm granite dyke												
		24.4 - 12 cm fine mafic dyke												
		24.7 - 1cm wide quartz and py vein												
		29.0 - minor pink garnets												
		29.5 - 30.0 - 40% pink garnets												
		- unit appears more sedimentary												
		(i.e. clastic)												
		30.4-31.3 - fine mafic dyke; earthy but												
		fresh appearance, non-magnetic												
		non-calcareous												
		- possibly fine grained diabase												
		- contacts sharp with chill												
		margins												
		32.4-32.5 - and 37.0-37.1 - granitic dyke												
		pyritic around sharp contacts												

DURHAM
GEOLOGICAL
SERVICES INC.

DIAMOND DRILL HOLE LOG GTO-15

METERAGE		ROCK TYPE AND DESCRIPTION	Core Angle to Axis	% Sul-phides	SAMPLE				ANALYTICAL RESULT					
From	To				Number	From	To	Length (m)	Au ppb	As ppm	Pb ppm	Zn ppm	Cu ppm	Ag ppm
		- unit becomes increasingly banded (bedded?)												
		with depth and becomes more emicaceous												
		- primarily biotite/ philographite but some												
		sections of muscovite												
		- grades into lower unit												
38.7	55.6	QUARTZ-BIOTITE GNEISS												
		- well-banded grey and brown fine grained												
		clastic sedimentary unit	80°											
		- argilliceous in part, garnetiferous in part												
		46.0-52.0 - unit is fine grained, possibly												
		cherty												
		46.9-47.0 - 50% semi massive po in calcite		10%	6503	46.6	47.1	0.5	3			1090	182	1.7
		47.4-47.65 - moderately graphitic argillite		1-3%	6504	47.1	48.3	1.2	3			640	136	1.3
		band with 10% disseminated py		40%	6505	48.3	48.7	0.4	2			290	71	2.2
		Geophysical anomaly												
		48.4-48.7 - 50% massive Po in calcareous		1-3%	6506	48.7	50.0	1.3	2			89	89	1.4
		chert matrix												
		- one speck Sph												
		48.7-49.0 - 10% diss. Po in calcareous,												
		garnetiferous												

DURHAM
GEOLOGICAL
SERVICES INC.

DIAMOND DRILL HOLE LOG

GTO-15

METERAGE		ROCK TYPE AND DESCRIPTION	Core Angle to Axis	% Sul-phides	SAMPLE				ANALYTICAL RESULT					
From	To				Number	From	To	Length (m)	Au ppb	As ppm	Pb ppm	Zn ppm	Cu ppm	Ag ppm
55.6	58.5	MAFIC VOLCANOGENIC SEDIMENTS												
		- as from 22.9 to 38.7												
58.5	78.9	QUARTZ-BIOTITE GNEISS												
		- as from 38.7 to 55.6												
		- up to 50% 5mm sized pink garnets												
		60.6 - blob magnetic Po												
		- periodic small sections within unit												
		of <5% disseminated pyrite												
		65.1-65.25 and 66.55 to 67.0 - granitic												
		dykes with fine disseminated pyrite		1%	6507	66.55	67.0	0.45	1					
		76.6-76.9 - auto brecciated, calcareous		1%	6508	76.6	76.9	0.3	2					
		fault gouge, 20% py across 2mm at 76.9												
	78.9	E.O.H. Nothing left in hole												

Rykert Twp.

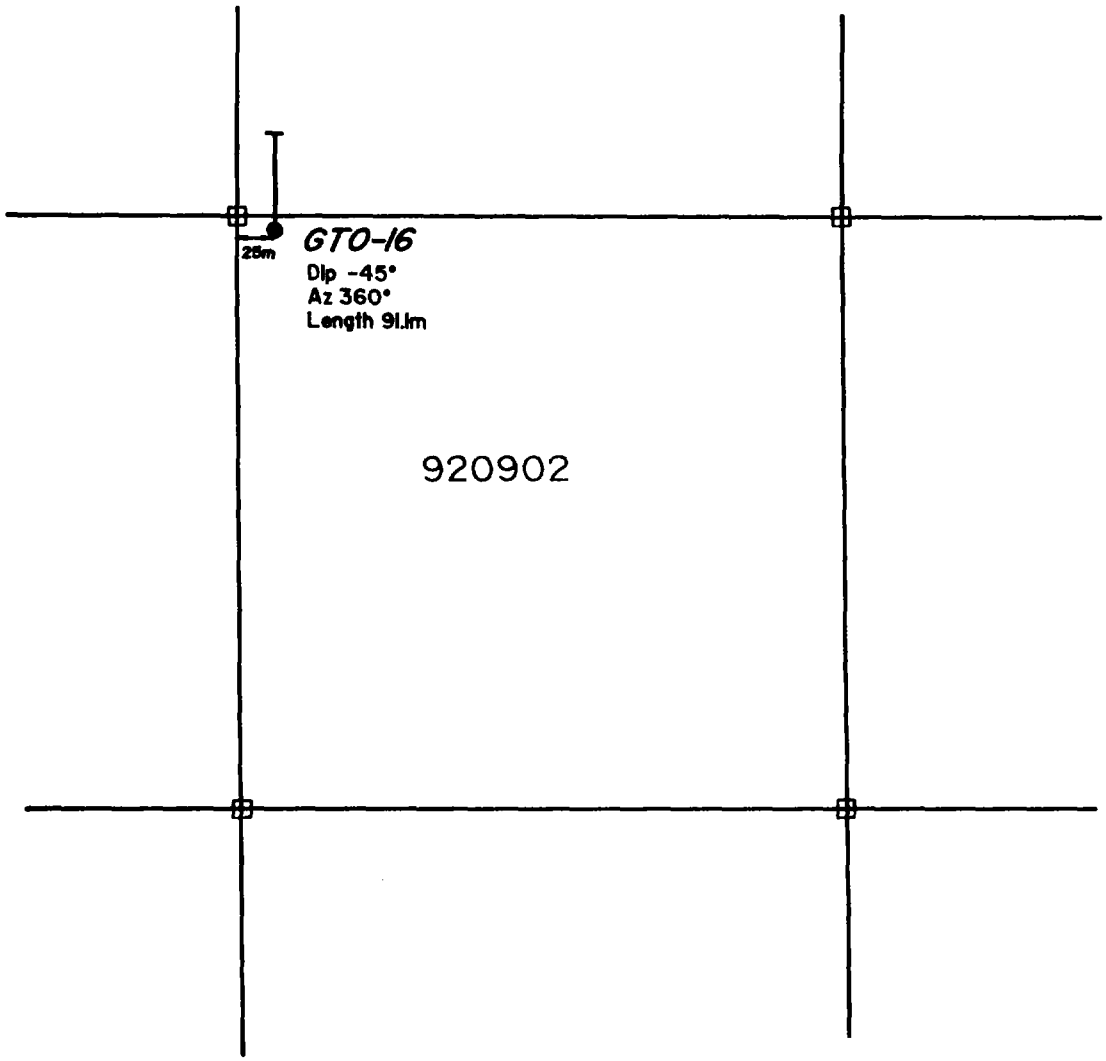

REVISIONS	DURHAM GEOLOGICAL SERVICES INC.		
	For: GOLDEN TRIO MINERALS LTD		
	Title: OBA PROJECT Diamond Drill Hole Location Map GTO-16		
	Date: JUNE 1988	Drawn: CG	Scale: 1:5000
	NTS:	Approved:	Fig.:

DURHAM GEOLOGICAL SERVICES INC.
Box 734
Timmins Ontario
P4N 7G2

DIAMOND DRILL HOLE LOG

PROJECT: Golden Trio Oba Project

AREA: Rykert East

CLAIM NUMBER: 920902

CORE SIZE: BQ

DRILLED BY: Falcon Drilling Ltd.

LOGGED BY: B. Barnes

CORE STORED AT: Camp 95

OBJECTIVE: Test MaxMin

HOLE NUMBER: GTO-16

LOCATION: 4000W, 1333S

AZIMUTH: 360°

DIP: -45°

DATE: February 8-9,1988

CASING: 13.4 m

LENGTH: 91.1 m

ACID TEST: -43° @ 91.1 m

Henry Hutten for B. Barnes

DURHAM
GEOLOGICAL
SERVICES INC.

DIAMOND DRILL HOLE LOG

GTO-16

METERAGE		ROCK TYPE AND DESCRIPTION	Core Angle to Axis	% Sul-phides	SAMPLE				ANALYTICAL RESULT					
From	To				Number	From	To	Length (m)	Au ppb	As ppm	Pb ppm	Zn ppm	Cu ppm	Ag ppm
0	13.4	OVERBURDEN AND CASING												
13.4	33.0	WACKESTONE												
		- massive to poorly foliated, green-grey	35°											
		- quartz-bio unit with sporadic lighter												
		zones of moderate calcareous alteration												
		- weakly chloritic												
		- may be volcano-sediments												
		- moderately hard, non-magnetic												
		- grades indistimately into lower unit												
33.0	91.1	CHERTY WACKESTONE												
		- as above unit but harder, cherty, quite												
		variable with biotitic banding, cherty												
		horizons and non-descript grey wackestone												
		and argilliceous zones	40°											
		- stronger, evident foliation												
		62.5-63.0 - pinhead sized garnets												
		67.0-67.4 - altered diorite												
		73.0-81.5 - 3-5% varioles (accretions) of												
		siliceous epidote, sanssauritized feld-	30°											
		spar												

DURHAM
GEOLOGICAL
SERVICES INC.

DIAMOND DRILL HOLE LOG

GTO-16

METERAGE		ROCK TYPE AND DESCRIPTION	Core Angle to Axis	% Sul-phides	SAMPLE				ANALYTICAL RESULT					
From	To				Number	From	To	Length (m)	Au ppb	As ppm	Pb ppm	Zn ppm	Cu ppm	Ag ppm
		75.8, 76.9 - 3cm white quartz												
		88.1-91.1 - well bedded purplish, garneti-		0%	6686	89.1	90.1	1.0	3	3				0.8
		ferous section weakly serecitic		0%	6685	90.1	91.1	1.0	2	4				1.0
	91.1	E.O.H.												

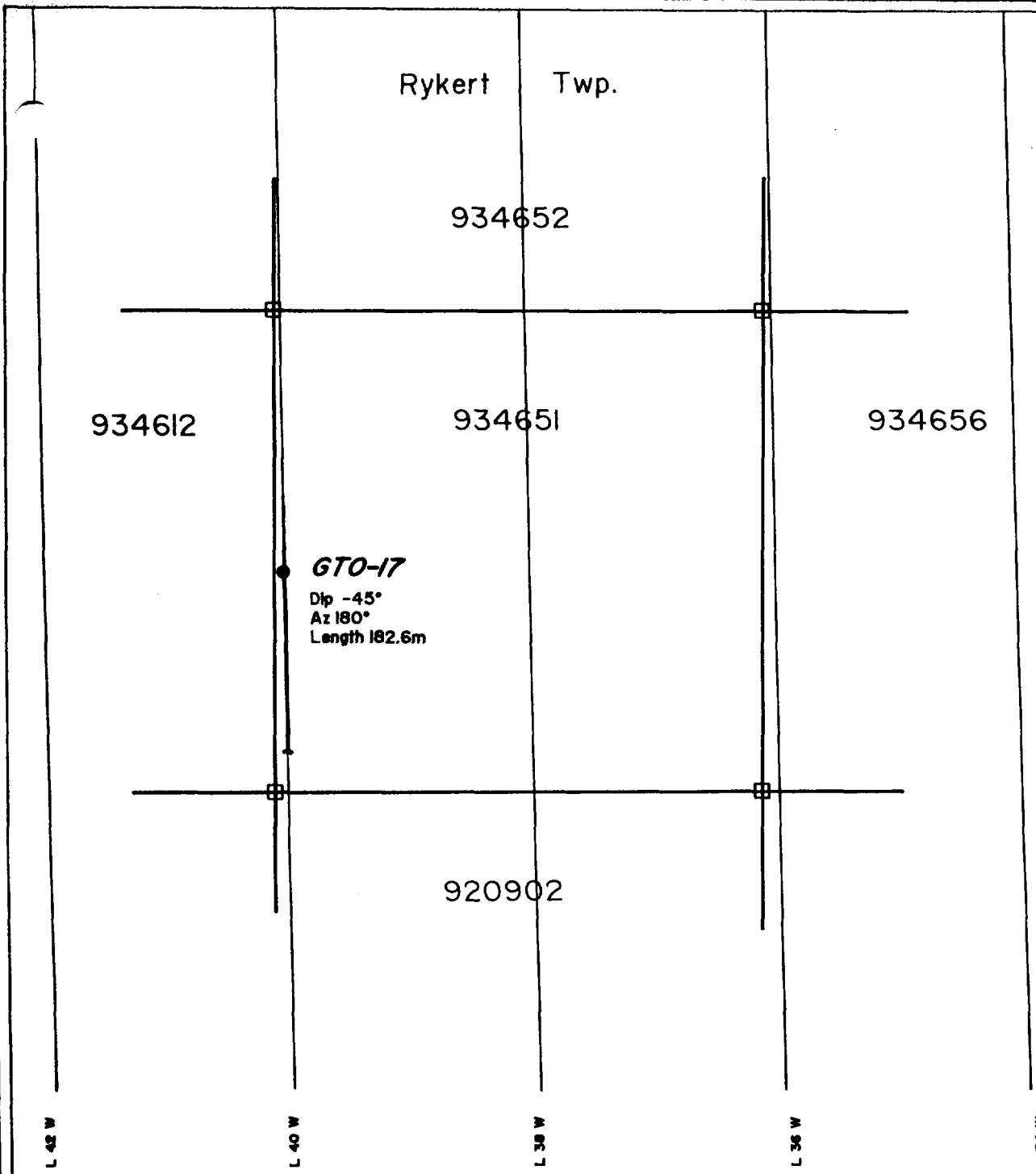

REVISIONS	DURHAM GEOLOGICAL SERVICES INC.		
	For: GOLDEN TRIO MINERALS LTD		
	Title: OBA PROJECT Diamond Drill Hole Location Map GTO-17		
	Date: JUNE 1988	Drawn: CG	Scale: 1:5000
	NTS:	Approved:	Fig.:

DURHAM GEOLOGICAL SERVICES INC.
Box 734
Timmins Ontario
P4N 7G2

DIAMOND DRILL HOLE LOG

PROJECT: Golden Trio Oba Project

AREA: Rykert East

CLAIM NUMBER: 934651

CORE SIZE: BQ

DRILLED BY: Falcon Drilling Ltd.

LOGGED BY: B. Barnes

CORE STORED AT: Camp 95

OBJECTIVE: Test MaxMin Anomaly

HOLE NUMBER: GTO-17

LOCATION: 4000W, 1125S

AZIMUTH: 180°

DIP: -45°

DATE: February 9-13, 1988

CASING: 24.4m

LENGTH: 182.6m

ACID TEST: -38° @ 182.6

Henry Mathieu for B. Barnes

DURHAM
GEOLOGICAL
SERVICES INC.

DIAMOND DRILL HOLE LOG

GTO-17

METERAGE		ROCK TYPE AND DESCRIPTION	Core Angle to Axis	% Sul-phides	SAMPLE				ANALYTICAL RESULT					
From	To				Number	From	To	Length (m)	Au ppb	As ppm	Pb ppm	Zn ppm	Cu ppm	Ag ppm
0	24.4	CASING AND OVERBURDEN												
24.4	27.8	GREYWACKE												
		- homogeneous												
		- medium grey coloured quartz-feldspar												
		- biotite fine grained sediment												
		- sporadically mildly calcareous												
		27.1-27.2 - diorite												
27.8	29.8	DIORITE												
		- sharp contact with upper unit		1%	6580	27.8	28.8	1.0	3	4				
		- grey aphanitic matrix with smeared off-												
		white feldspars up to 5mm length		1%	6581	28.8	29.8	1.0	7	5				
		- odd speck pyrite												
		- grades into lower unit												
29.8	30.75	GREYWACKE												
		- as from 24.4-27.8												
		- sericite		3%	6582	29.8	30.75	0.95	5	3			57	0.8
		30.0 - 5cm banded Py, Po 50%												

DURHAM
GEOLOGICAL
SERVICES INC.

DIAMOND DRILL HOLE LOG GTO-17

METERAGE		ROCK TYPE AND DESCRIPTION	Core Angle to Axis	% Sul-phides	SAMPLE				ANALYTICAL RESULT					
From	To				Number	From	To	Length (m)	Au ppb	As ppm	Pb ppm	Zn ppm	Cu ppm	Ag ppm
30.75	33.1	DIORITE												
		- as from 27.8-29.8			6583	30.75	32.25	1.5	6	4				
					6584	32.25	33.1	0.85	4	5				
33.1	40.5	SEDIMENT												
		- argillaceous wackestone												
		- dark grey, foliated	55°											
		- 1% yellow leucoxene, authophylits pinhead												
		garnets												
		- 5% transluscent off-white												
		- alteration minced (i.e. silliminite)												
		33.9 - 10cm massive Po		3%	6585	33.1	34.4	1.3	3	12		125	65	1.0
		- unit becomes graphitic in various layers												
		between 38.7 to 40.5 with 2-3% pyrite												
		39.0-39.2 - bleached sereatic cherty		3%	6586	38.7	39.5	0.8	3	35		860	225	0.8
		sediments		3%	6587	39.5	40.5	1.0	1	13		700	74	0.7
		- graded contact with lower unit												
40.5	42.4	DIORITE												
		- as from 27.8 to 29.8			6588	40.5	42.0	1.5	4	4				

DURHAM
GEOLOGICAL
SERVICES INC.

DIAMOND DRILL HOLE LOG

GTO-17

METERAGE		ROCK TYPE AND DESCRIPTION	Core Angle to Axis	% Sul-phides	SAMPLE				ANALYTICAL RESULT					
From	To				Number	From	To	Length (m)	Au ppb	As ppm	Pb ppm	Zn ppm	Cu ppm	Ag ppm
42.4	46.2	SEDIMENT												
		- as from 33.1-40.5												
		- well banded, biotitic cherty banding												
		42.4-42.65 - 30% massive Py, Po, speck Sph		4%	6589	42.4	43.9	1.5	6	34		825	102	1.1
		42.9-43.0 - gf and 30% Py, Po		1%	6590	43.9	44.9	1.0	4	2		87	60	0.5
		45.3-45.5 - 20% Py, Po		2%	6591	44.9	46.2	1.3	8	3		560	86	1.3
46.2	48.2	DIORITE												
		- as from 27.8-40.5												
48.2	51.3	SEDIMENTS												
		- as from 33.1-40.5		2%	6592	48.2	49.7	1.5	3	2		116	79	0.8
		- banding distinct	65° @ 50.0	3%	6593	49.7	51.3	1.6	11	2		113	74	0.7
		- brown biotite and green chloritic bands,												
		thin carbonate bands												
		- 1-3% Py throughout												
		- odd speck Sph												
51.3	57.0	DIORITE												
		- as from 27.8-40.5												

DURHAM
GEOLOGICAL
SERVICES INC.

DIAMOND DRILL HOLE LOG GTO-17

METERAGE		ROCK TYPE AND DESCRIPTION	Core Angle to Axis	% Sul-phides	SAMPLE				ANALYTICAL RESULT					
From	To				Number	From	To	Length (m)	Au ppb	As ppm	Pb ppm	Zn ppm	Cu ppm	Ag ppm
57.0	58.4	SEDIMENT												
		- as from 33.1-40.5			6594	57.0	58.4	1.4	6	1		110	100	0.8
58.4	61.6	DIORITE												
		- as from 27.8-40.5												
61.6	182.6	SEDIMENT												
		- as from 33.1-40.5												
		- well banded, green and brown												
		- argillite and chert												
		- less than 1% sulfides throughout												
		71.0-71.3 - diorite												
		70.7-71.4 - mafic dyke	75° @ 75m											
		- unit remains very consistent till 122.0 m												
		122.0-125.0 - calcareous modules												
		127.1-127.7 - vesicles unit is darker,												
		nearly black with garnetiferous sections												
		- unit becomes increasingly cherty below												
		127												
		128.3 - 10cm quartz, ankerite												
		128.6 - 8cm quartz vein												
		132.3-141.3 - sporadically garnetiferous	70°											

DURHAM
GEOLOGICAL
SERVICES INC.

DIAMOND DRILL HOLE LOG GTO-17

METERAGE		ROCK TYPE AND DESCRIPTION	Core Angle to Axis	% Sul-phides	SAMPLE				ANALYTICAL RESULT					
From	To				Number	From	To	Length (m)	Au ppb	As ppm	Pb ppm	Zn ppm	Cu ppm	Ag ppm
		138.4-138.7 - banded graphite		2%	6597	137.9	139.4	1.5	21	12		510	63	1,3
		138.7 - blob of Py, Po		2%	6598	138.4	140.9	1.5	4	12		75	61	0.9
		141.3-143.9 - diorite												
		149.4-150.3 - diorite												
		158.2-160.1 - diorite												
		166.8-165.2 - diorite chill margin												
		163.0-163.1 - 5cm graphitic bed and 2cm 60%												
		Po												
				2%	6595	161.3	163.8	1.5	5	9		225	105	0.8
		166.1-166.2 - white q.v.												
		166.1-182.6 - sporadic 1cm beds of graphite												
		170.7-170.95 - pervasive carbonate			6596	170.7	171.2	0.5	8	2		81	61	0.5
		180.1-180.3 - diorite												
	182.6	E.O.H.												

DURHAM GEOLOGICAL SERVICES INC.
Box 734
Timmins Ontario
P4N 7G2

DIAMOND DRILL HOLE LOG

PROJECT:	Golden Trio Oba Project	HOLE NUMBER:	GTO-24
AREA:	Rykert Twp.	LOCATION:	Anomaly 2610M L0+00 / 1+75N
CLAIM NUMBER:	933160	AZIMUTH:	180°
CORE SIZE:	BQ	DIP:	-45°
DRILLED BY:	Falcon Drilling	DATE:	February 17-19, 1988
LOGGED BY:	S. Rusnak	CASING:	7.6m
CORE STORED AT:	Camp 95	LENGTH:	91.1m
OBJECTIVE:	To Test Anomaly 2610M	ACID TEST:	-43° @ 91.1m

Henry P Hutten For S. Rusnak

DURHAM
GEOLOGICAL
SERVICES INC.

DIAMOND DRILL HOLE LOG

GTO-24

METERAGE		ROCK TYPE AND DESCRIPTION	Core Angle to Axis	% Sul-phides	SAMPLE				ANALYTICAL RESULT					
From	To				Number	From	To	Length (m)	Au ppb	As ppm	Pb ppm	Zn ppm	Cu ppm	Ag ppm
0	7.6	CASING - OVERBURDEN												
7.6	10.0	OVERBURDEN												
10.0	33.0	DIABASE												
		- green colour												
		- medium grained												
		- massive - homogenous												
		- magnetic		<1%										
		- local pyrite												
		25.0-33.0 - finer grained; 10-15% epidote												
		31.2-31.3 - 30% quartz pyrite		5%										
33.0	52.7	GRANITE (FELDSPAR PORPHYRY)												
		- coarse grained												
		- orange, pink, white, grey colour												
		- massive												
		- porphyritic feldspars												
		49.5-50.4 - greywacke												
		- greyish green colour												
		- fine grained; massive												

DURHAM
GEOLOGICAL
SERVICES INC.

DIAMOND DRILL HOLE LOG

GTO-24

METERAGE		ROCK TYPE AND DESCRIPTION	Core Angle to Axis	% Sul-phides	SAMPLE				ANALYTICAL RESULT					
From	To				Number	From	To	Length (m)	Au ppb	As ppm	Pb ppm	Zn ppm	Cu ppm	Ag ppm
52.7	54.0	GREYWACKE												
		- fine grained												
		- grey-green colour												
		- massive												
54.0	54.6	FELDSPAR PORPHYRY												
		- same as 33.0-52.7												
		- grey colour												
54.6	55.1	GREYWACKE												
		- same as 49.5- 50.4												
		52.7-54.0 - pyrite, epidote		2-3%										
55.1	56.3	FELDSPAR PORPHYRY												
		- same as 54.0-54.6												
		- grey colour												
56.3	58.5	GREYWACKE												
		- same as 52.7-54.0												
		57.1 - 1cm quartz veining	60°											
		- foliated												

DURHAM
GEOLOGICAL
SERVICES INC.

DIAMOND DRILL HOLE LOG GTO-24

METERAGE		ROCK TYPE AND DESCRIPTION	Core Angle to Axis	% Sul-phides	SAMPLE				ANALYTICAL RESULT					
From	To				Number	From	To	Length (m)	Au ppb	As ppm	Pb ppm	Zn ppm	Cu ppm	Ag ppm
58.5	58.9	FELDSAPR PORPHYRY												
		- same as 54.0-54.6												
58.9	62.7	GREYWACKE												
		- same as 56.3-58.5												
		- garnetiferous												
		60.0-61.2 - pyrite, sphalerite 2-3%		2-3%	6761	60.0	61.5	1.5	2			93		
62.7	72.3	FELDSPAR PORPHYRY												
		- same as 54.0-54.6												
		63.7 - 4cm quartz veining	60°											
72.3	72.8	GREYWACKE												
		- same as 56.6-58.5												
		- pyrite, sphalerite 2-3%		2-3%										
72.8	73.4	FELDSPAR PORPHYRY												
		- same as 54.0-54.6												

DURHAM GEOLOGICAL SERVICES INC.

DIAMOND DRILL HOLE LOG

GTO-24

METERAGE		ROCK TYPE AND DESCRIPTION	Core Angle to Axis	% Sul-phides	SAMPLE				ANALYTICAL RESULT					
From	To				Number	From	To	Length (m)	Au ppb	As ppm	Pb ppm	Zn ppm	Cu ppm	Ag ppm
73.4	74.9	GREYWACKE												
		- same as 56.5-58.5												
		- pyrite, sphalerite 2-3%												
		- garnetiferous												
74.9	82.9	MAFIC VOLCANIC												
		- green colour												
		- fine grained												
		- chloritic												
		- 5% epidote veinlets												
		- 2-3% quartz veinlets												
		- pyrite		1-2%	6762	81.0	82.5	1.5	3					
82.9	86.2	FELDSPAR PORPHYRY												
		- same as 33.0-52.7												
		- bottom contact	50°											
86.2	91.1	GREYWACKE												
		- greyish green colour												
		- medium grained												
		- foliated	60°											
		- pyrite		2-3%										

DURHAM
GEOLOGICAL
SERVICES INC.

DIAMOND DRILL HOLE LOG

GTO-24

METERAGE		ROCK TYPE AND DESCRIPTION	Core Angle to Axis	% Sul-phides	SAMPLE				ANALYTICAL RESULT					
From	To				Number	From	To	Length (m)	Au ppb	As ppm	Pb ppm	Zn ppm	Cu ppm	Ag ppm
		- po		1-2%										
		- sphalerite 5-10%			6763	86.5	88.0	1.5	10			139	115	1.1
		89.7 - 3cm quartz veining	60°		6764	88.0	89.5	1.5	2			4450	200	1.2
		90.4 - 6cm quartz veining	70°		6765	89.5	91.1	1.6	3			240	158	1.4
	91.1	E.O.H.												

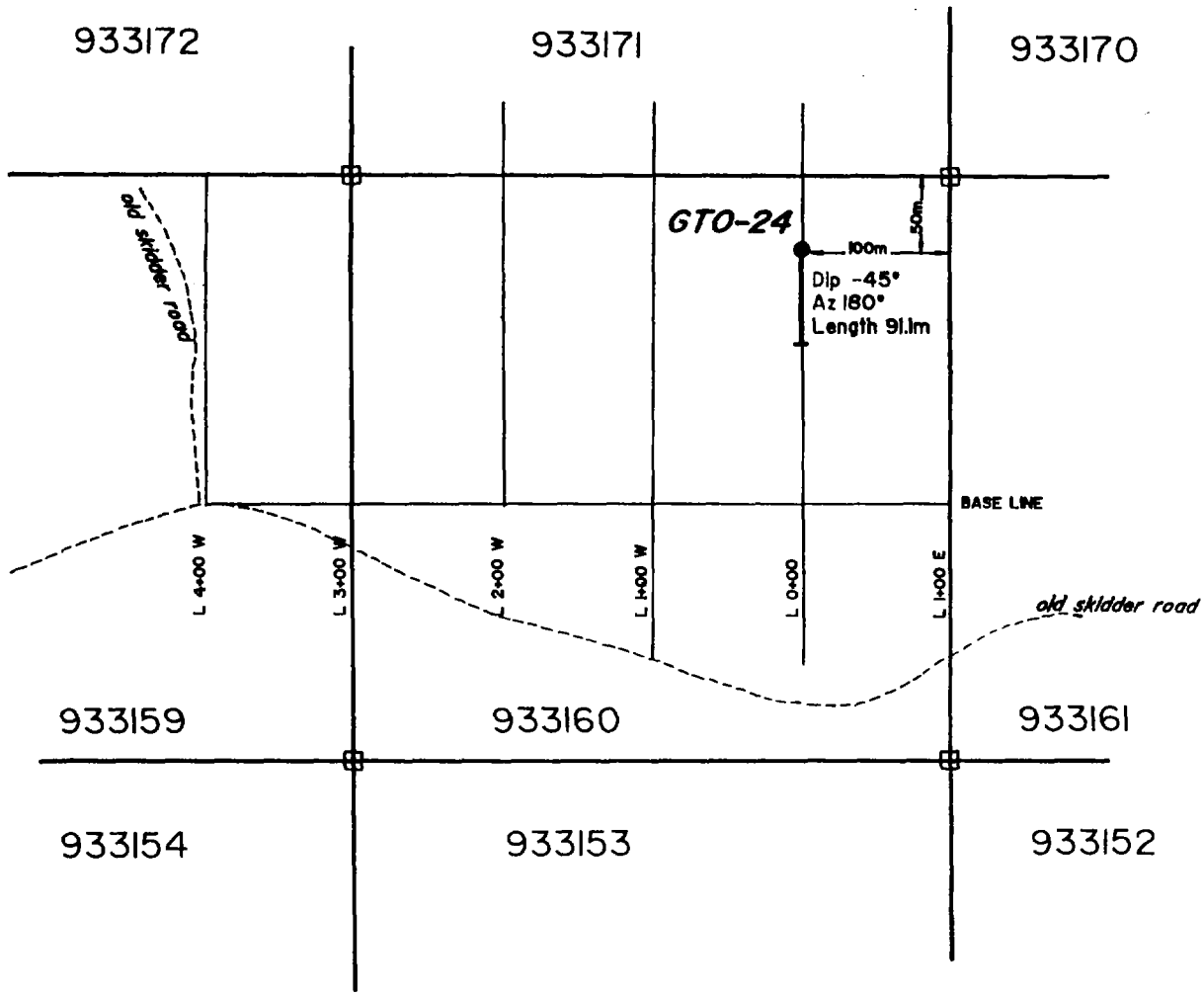

REVISIONS	DURHAM GEOLOGICAL SERVICES INC.		
	For: GOLDEN TRIO MINERALS LTD		
	Title: OBA PROJECT Diamond Drill Hole Location Map GTO-24		
	Date: JUNE 1988	Drawn: CG	Scale: 1:5000
	NTS:	Approved:	Fig.:

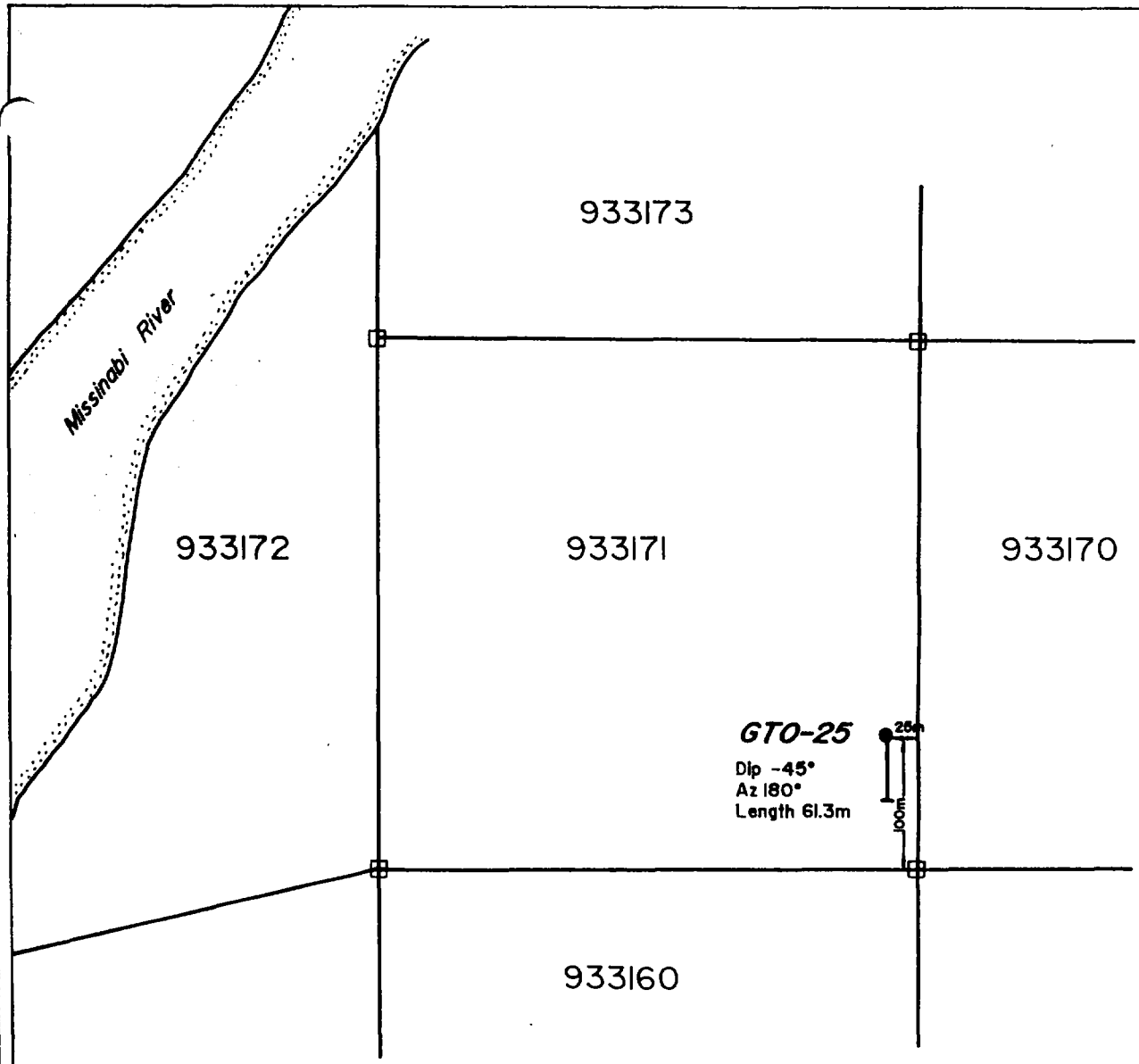

REVISIONS	DURHAM GEOLOGICAL SERVICES INC.		
	For: GOLDEN TRIO MINERALS LTD		
	Title: OBA PROJECT Diamond Drill Hole Location Map GTO-25		
	Date: JUNE 1988	Drawn: CG	Scale: 1:5000
	NTS:	Approved:	Fig.:

DURHAM GEOLOGICAL SERVICES INC.
Box 734
Timmins Ontario
P4N 7G2

DIAMOND DRILL HOLE LOG

PROJECT: Golden Trio Oba Project

AREA: Rykert Twp.

CLAIM NUMBER: 933171

CORE SIZE: BQ

DRILLED BY: Falcon Drilling Ltd.

LOGGED BY: S. Rusnak

CORE STORED AT: Camp 95

OBJECTIVE: To Test Anomaly 2610K

HOLE NUMBER: GTO-25

LOCATION: Anomaly 2610K
L0+00/2+90N

AZIMUTH: 180°

DIP: -45°

DATE: February 15-17, 1988

CASING: 4.6m

LENGTH: 61.3m

ACID TEST:

Henry P Kuttein for S. Rusnak

DURHAM
GEOLOGICAL
SERVICES INC.

DIAMOND DRILL HOLE LOG

GTO-25

METERAGE		ROCK TYPE AND DESCRIPTION	Core Angle to Axis	% Sul-phides	SAMPLE				ANALYTICAL RESULT					
From	To				Number	From	To	Length (m)	Au ppb	As ppm	Pb ppm	Zn ppm	Cu ppm	Ag ppm
0	4.6	CASING-OVERBURDEN												
4.6	4.9	OVERBURDEN												
4.9		DIABASE												
		- green colour												
		- medium to coarse grained												
		- massive - homogenous												
		- magnetic												
		- local pyrite		<1%										
		4.9-8.0 - broken, blocky core												
	61.3	E.O.H.												

D.D.H. LOCATION SHEET

GOLDEN TRIO MINERALS ORA PROJECT

HOLE NO: GTO-31 LOCATION: L0100/13+90N

SCALE: 1:5000 DATE: FEB/88

AZIMUTH: 180° DIP: -60°

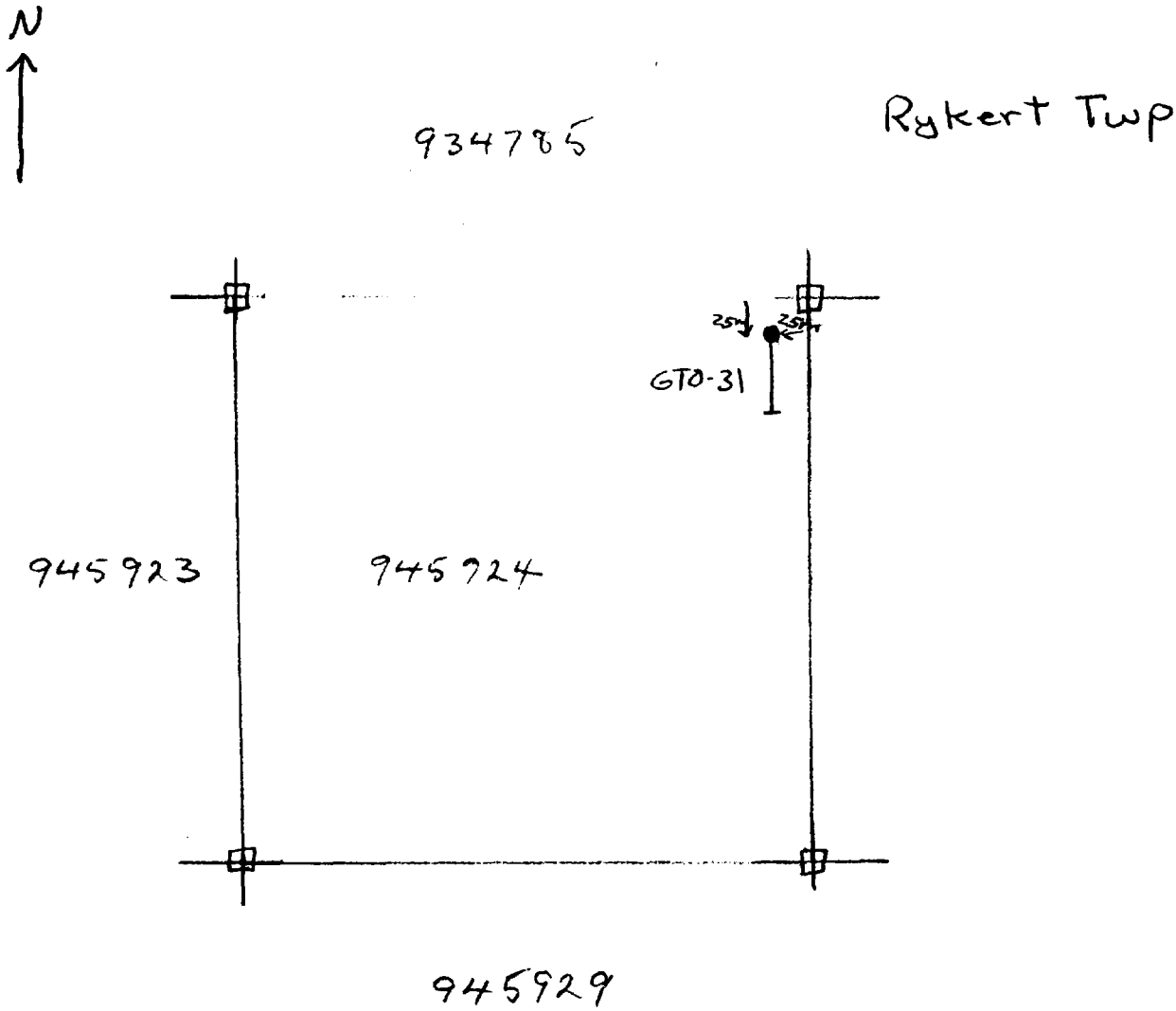

DDH LOCATION SKETCH

Golden Trio Minerals Ltd — OBA PROJECT

Hole No. GTO-35 — Location L 2+00E / 0+10S

Scale: 1:5000 — Date Feb/88

Azimuth 180° — Dip -45°

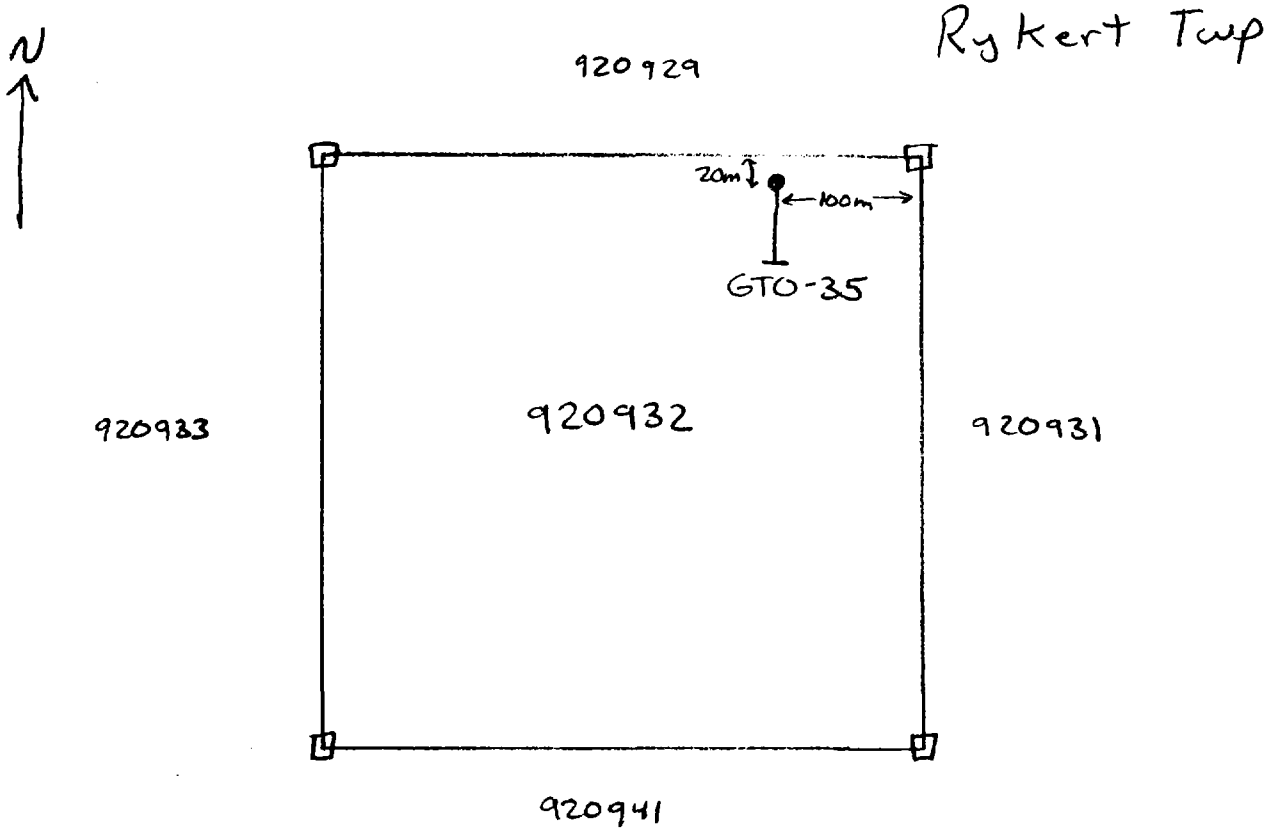

DURHAM GEOLOGICAL SERVICES INC.
Box 734
Timmins Ontario
P4N 7G2

DIAMOND DRILL HOLE LOG

PROJECT: Golden Trio/Oba Project

AREA: Rykert Twp

CLAIM NUMBER: 945924

CORE SIZE: BQ

DRILLED BY: Falcon Drilling

LOGGED BY: B. Barnes

CORE STORED AT: Camp 95

OBJECTIVE: Maxmin Anomaly

HOLE NUMBER: GTO-31

LOCATION: L0+00/13+90N
Rykert East Grid

AZIMUTH: 180°

DIP: -60°

DATE: Feb 6-7, 1988

CASING: 25.0m

LENGTH: 73.5m

ACID TEST:

Kenny Platten for B. Barnes

DURHAM GEOLOGICAL SERVICES INC.

GTO -31

DIAMOND DRILL HOLE LOG

METERAGE		ROCK TYPE AND DESCRIPTION	Core Angle to Axis	% Sul-phides	SAMPLE				ANALYTICAL RESULT					
From	To				Number	From	To	Length (m)	Au ppb	As ppm	Pb ppm	Zn ppm	Cu ppm	Ag ppm
0	25.0	Casing												
25.0	37.5	Greywacke												
		- a massive to moderately foliated												
		grey, fine grained quartz-feldspar												
		clastic sediment												
		- moderately calcareous with												
		intermittent but pervasive zones												
		throughout unit												
		- fine calcitic fractures throughout												
		- 28.6-28.8m white quartz vein		0	6703	28.6	28.8	0.2						
		- 32.6m 4cm white quartz vein												
		- 33.9-34.5 - well banded		10	6704	33.9	34.5	0.6						
		graphitic argillite (15% gph)												
		& (10% py)												
		- 36.3-37.5m unit becomes		20	6705	36.3	37.5	1.2						
		cherty w 20% py												
37.5	39.7	Graphite, Chert, Massive Sulfides	35°											
		- intermixed chemical sediments		80	6706	37.5	38.5	1.0						
		- massive sulfides 70%, chert		80	6707	38.5	39.5	1.0						
		15% from 37.5-39.9m		15	6708	39.5	40.5	1.0						

DURHAM GEOLOGICAL SERVICES INC.

GTO - 31

DIAMOND DRILL HOLE LOG

METERAGE From	METERAGE To	ROCK TYPE AND DESCRIPTION	Core Angle to Axis	% Sulphides	SAMPLE Number	SAMPLE From	SAMPLE To	SAMPLE Length (m)	ANALYTICAL RESULT Au ppb	As ppm	Pb ppm	Zn ppm	Cu ppm	Ag ppm
		- 38.25 - 38.5m 20% gph												
39.7	47.7	Sulphidic Greywacke												
		- grey clastic sediment w 15-20%		20	6709	40.5	42.0	1.5						
		py throughout		15	6710	42.0	43.5	1.5						
		- 45.1 - 45.5 70% massive py,		15	6711	43.5	45.1	1.6						
		5% gph, chert		70	6712	45.1	45.6	0.5						
		- 45.6 - 47.7 fault gouge		3	6713	45.6	47.6	2.0						
		- 45.6 graphite												
		- 47.6 calcite												
47.7	55.8	Greywacke - as from 25.0 - 37.5												
		- very competant, siliceous												
55.8	57.1	Feldspar Porphyry												
		- dioritic												
		- altered, smeared, foliated		<1%	6714	55.8	57.1	1.3						
		- <1% fine disseminated												
		sulphides												
		- very sharp contacts parallelling												
		foliation												

DURHAM GEOLOGICAL SERVICES INC.

GTO-31

DIAMOND DRILL HOLE LOG

METERAGE		ROCK TYPE AND DESCRIPTION	Core Angle to Axis	% Sul-phides	SAMPLE				ANALYTICAL RESULT					
From	To				Number	From	To	Length (m)	Au ppb	As ppm	Pb ppm	Zn ppm	Cu ppm	Ag ppm
57.1	73.5	Greywacke												
		- as from 25.0-37.5 m												
		- very hard, poor foliation but	45°											
		bedding is visible												
		- appears that tops are down hole												
		- infrequent 1-2 m thick graphitic												
		horizons												
		- 59.3 + 59.6 m - 10 cm wide mafic												
		dykes, green, calcareous, chloritic												
		and non magnetic												
	73.5	EOH												
		- 8 rods & core barrel broken												
		off in hole												

DURHAM GEOLOGICAL SERVICES INC.
Box 734
Timmins Ontario
P4N 7G2

DIAMOND DRILL HOLE LOG

PROJECT: Golden Trio/Oba Project

AREA: Rykert Twp.

CLAIM NUMBER: 920932

CORE SIZE: BQ

DRILLED BY: Falcon Drilling

LOGGED BY: S. Rusnak

CORE STORED AT: Camp 95

OBJECTIVE: EM Conductor

HOLE NUMBER: GTO-35

LOCATION: L 2+00E / 0+10S

AZIMUTH: 180°

DIP: -45°

DATE: Feb 13-14, 1988

CASING: 28.8m

LENGTH: 94.2m

ACID TEST:

Kerry Hutten for S. Rusnak

DURHAM GEOLOGICAL SERVICES INC.

GTO-35

DIAMOND DRILL HOLE LOG

METERAGE		ROCK TYPE AND DESCRIPTION	Core Angle to Axis	% Sulphides	SAMPLE				ANALYTICAL RESULT					
From	To				Number	From	To	Length (m)	Au ppb	As ppm	Pb ppm	Zn ppm	Cu ppm	Ag ppm
0	33.8	Casing												
33.8	94.2	Greywacke - Biotite rich												
		- grey colour												
		- medium grained												
		- foliated	70°											
		- 5% impure qtz veining	65-75°											
		throughout - 0.5 - 2.0 cm veinlets												
		except where noted												
		- 33.8 - 34.1 qtz vein, pink colour	15°											
		and possibly a dyke												
		- 39.0 - 39.4 quartz vein	75°											
		- 43.0 - 43.5 felsic dyke with 90%	15°											
		quartz and feldspar												
		- 43.1 - 45.0 m broken blocky core												
		- 51.6 - 51.8 m 70% quartz												
		- 54.8 - 55.3 impure quartz vein	45°		6687	54.5	55.6	1.0						
		- 55.8 - 56.0 30% quartz												
		- 57.3 - 57.5 garnetiferous												
		- 63.7 - 63.8 m 80% quartz												
		- 66.2 - 66.3 m 80% quartz												
		- 66.9 - 67.2 m 30% quartz												

DURHAM
GEOLOGICAL
SERVICES INC.

DIAMOND DRILL HOLE LOG

METERAGE		ROCK TYPE AND DESCRIPTION	Core Angle to Axis	% Sulphides	SAMPLE				ANALYTICAL RESULT					
From	To				Number	From	To	Length (m)	Au ppb	As ppm	Pb ppm	Zn ppm	Cu ppm	Ag ppm
		- 75.2 - 75.7 quartz vein with												
		pyrite along contacts	45°	<1	6688	75.0	76.0	1.0						
		- 78.3 - 78.4 70% quartz	75°											
		- 81.8 6cm quartz vein	60°											
		- 84.3 15cm quartz vein, impure	75°											
		- 84.6 - 85.1 quartz vein	45°		6689	84.5	85.5	1.0						
		- 86.2 - 86.7 garnetiferous												
		- 87.0 - 87.1 quartz vein, 70% qtz												
		- 88.1 - 88.2 garnetiferous												
		- 88.5 - 90.3 garnetiferous												
		- 89.0 - 94.2 py (<1%)												
		- 93.5 - 93.8 garnetiferous												
	94.2	EOH												

Ministry of Northern Development and Mines
Ontario

Report of Work (Mining Act)

DOCUMENT No. W 8906.4474

42G06SW0004 10 RYKERT

900

Name and Address of Recorded Holder

Golden Trio Minerals Ltd. | T 720

1401-141 Adelaide St. W., Toronto, Ont. M5H 3M7

Summary of Work Performance and Distribution of Credits

Total Work Days Cr. claimed	Mining Claim Prefix	Mining Claim Number	Work Days Cr.	Mining Claim Prefix	Mining Claim Number	Work Days Cr.	Mining Claim Prefix	Mining Claim Number	Work Days Cr.
2443		see attached							
for Performance of the following work. (Check one only)		list							
☐ Manual Work									
☐ Shaft Sinking Drifting or other Lateral Work.									
☐ Compressed Air, other Power driven or mechanical equip.									
☐ Power Stripping									
☒ Diamond or other Core drilling									
☐ Land Survey									

ONTARIO GEOLOGICAL SURVEY ASSESSMENT FILES OFFICE
OCT 13 1989
RECEIVED

All the work was performed on Mining Claim(s): 944606, 920902, 934651, 933160, 933171, 920932, 945924

Required Information eg: type of equipment, Names, Addresses, etc. (See Table Below)

Falcon Drilling Ltd.
Box 578, Prince George, B.C.
V2L 4S8

RECORDED
APR 27 1989

RECEIVED
TORONTO MINING DIVISION
APR 27 1989
16:00 RB

		Metarage	
GTO-6	Feb 8-9, 1988	72.8	944606
GTO-15	Feb 6-7, 1988	78.9	920902
GTO-16	Feb 8-9, 1988	91.1	920902
GTO-17	Feb 9-13, 1988	182.6	934651
GTO-24	Feb 17-19, 1988	91.1	933160
GTO-25	Feb 15-17, 1988	61.3	933171
GTO-31	Feb 6-7, 1988	73.5	945924
GTO-35	Feb 13-14, 1988	94.2	920932
		745.5m = 2445 feet	

Work performed Feb. 6th to 19th, 1988

Date of Report: April 27/89

Recorded Holder or Agent (Signature): Henry P Hutteri

Certification Verifying Report of Work

I hereby certify that I have a personal and intimate knowledge of the facts set forth in the Report of Work annexed hereto, having performed the work or witnessed same during and/or after its completion and the annexed report is true.

Name and Postal Address of Person Certifying

Henry Hutteri

Box 1330, Timmins, Ont. P4N 7J8

Date Certified: April 27/89

Certified by (Signature): Henry P Hutteri

Table of Information/Attachments Required by the Mining Recorder

Type of Work	Specific information per type	Other information (Common to 2 or more types)	Attachments
Manual Work	Nil	Names and addresses of men who performed manual work/operated equipment, together with dates and hours of employment.	Work Sketch: these are required to show the location and extent of work in relation to the nearest claim post.
Shaft Sinking, Drifting or other Lateral Work			
Compressed air, other power driven or mechanical equip.	Type of equipment		
Power Stripping	Type of equipment and amount expended. Note: Proof of actual cost must be submitted within 30 days of recording.	Names and addresses of owner or operator together with dates when drilling/stripping	

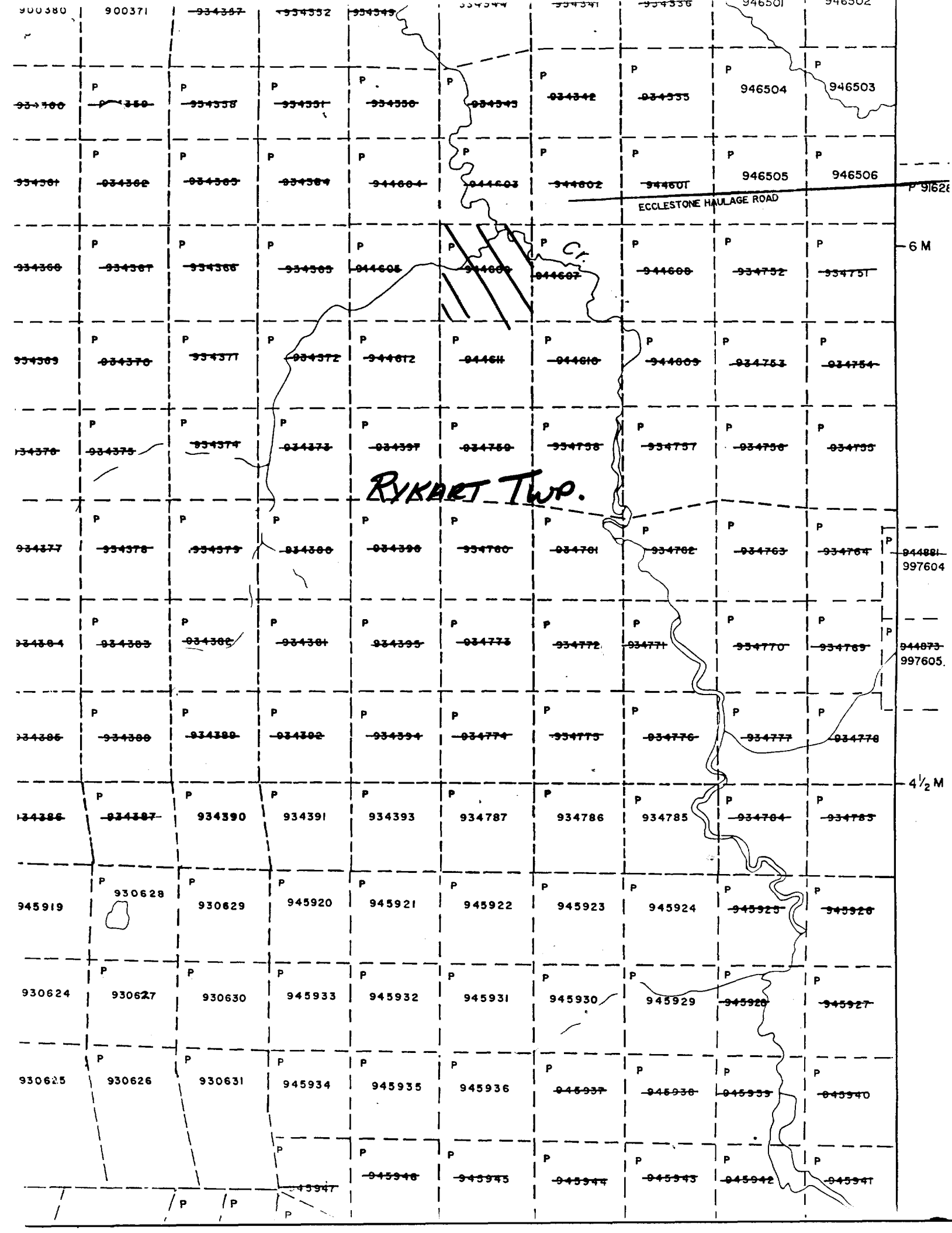
900380
900371
946501
946502
946504
946503
946505
946506
ECCLESTONE HAULAGE ROAD
6 M
RYKART TWP.
997604
997605
4½ M
934390
934391
934393
934787
934786
934785
930628
945919
930629
945920
945921
945922
945923
945924
930624
930627
930630
945933
945932
945931
945930
945929
930625
930626
930631
945934
945935
945936

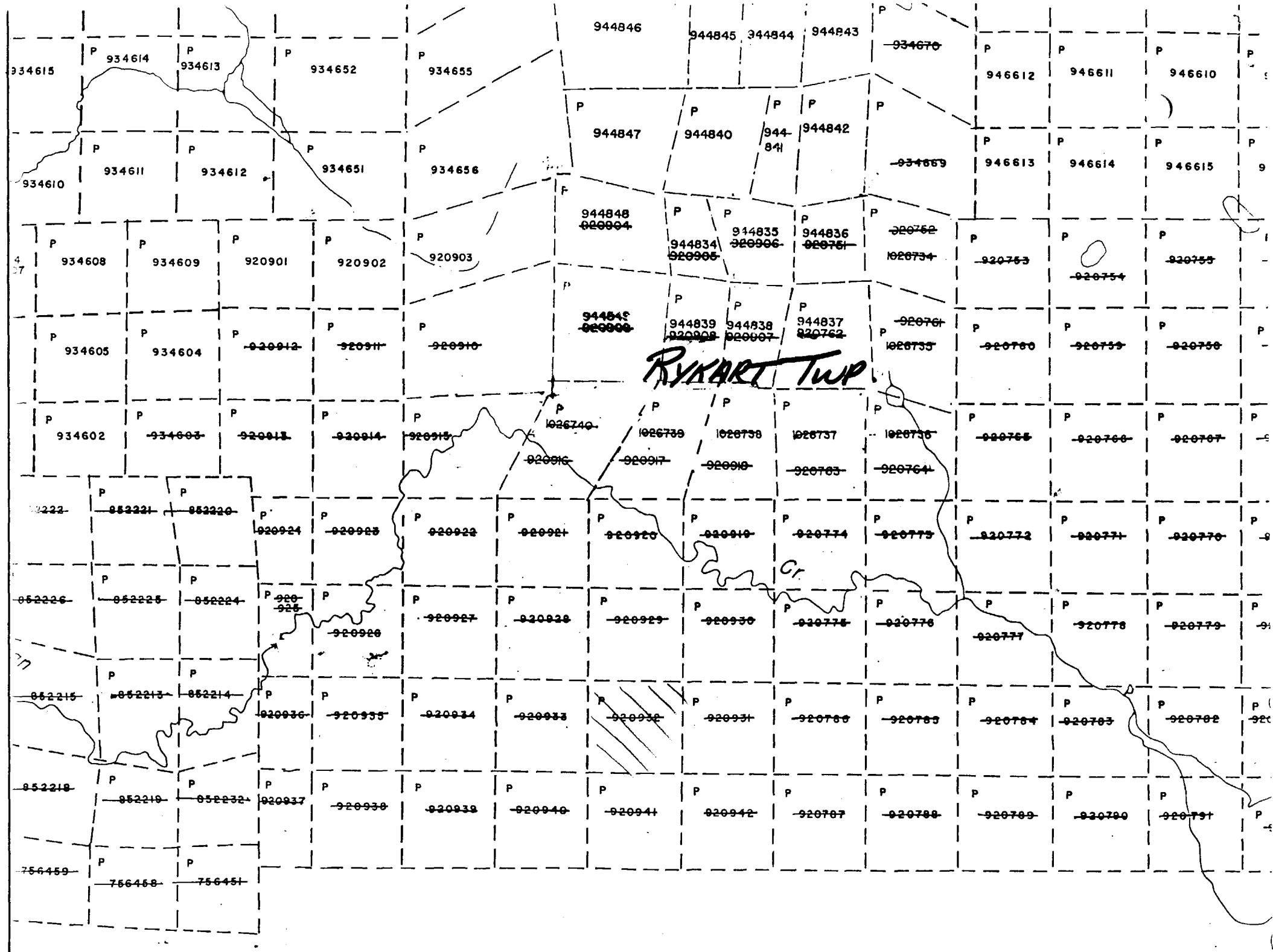
RYKART TWP
Cr
934615
934614
934613
934652
934655
944846
944845
944844
944843
934670
946612
946611
946610
934610
934611
934612
934651
934656
944847
944840
944841
944842
934669
946613
946614
946615
934608
934609
920901
920902
920903
944848
920904
944834
920905
944835
920906
944836
920761
920752
1026734
920753
920754
920755
934605
934604
920912
920911
920910
944849
920908
944839
920908
944838
920907
944837
920762
920761
1026733
920760
920759
920758
934602
934603
920913
920914
920915
1026740
920916
1026739
920917
1026738
920918
1026737
920763
1026736
920764
920765
920766
920767
852221
852220
920924
920923
920922
920921
920920
920919
920774
920773
920772
920771
920770
852226
852225
852224
920925
920926
920927
920928
920929
920930
920775
920776
920777
920778
920779
852215
852213
852214
920936
920935
920934
920933
920932
920931
920780
920783
920784
920783
920782
852218
852219
852232
920937
920938
920939
920940
920941
920942
920787
920788
920789
920790
920791
756459
756458
756451

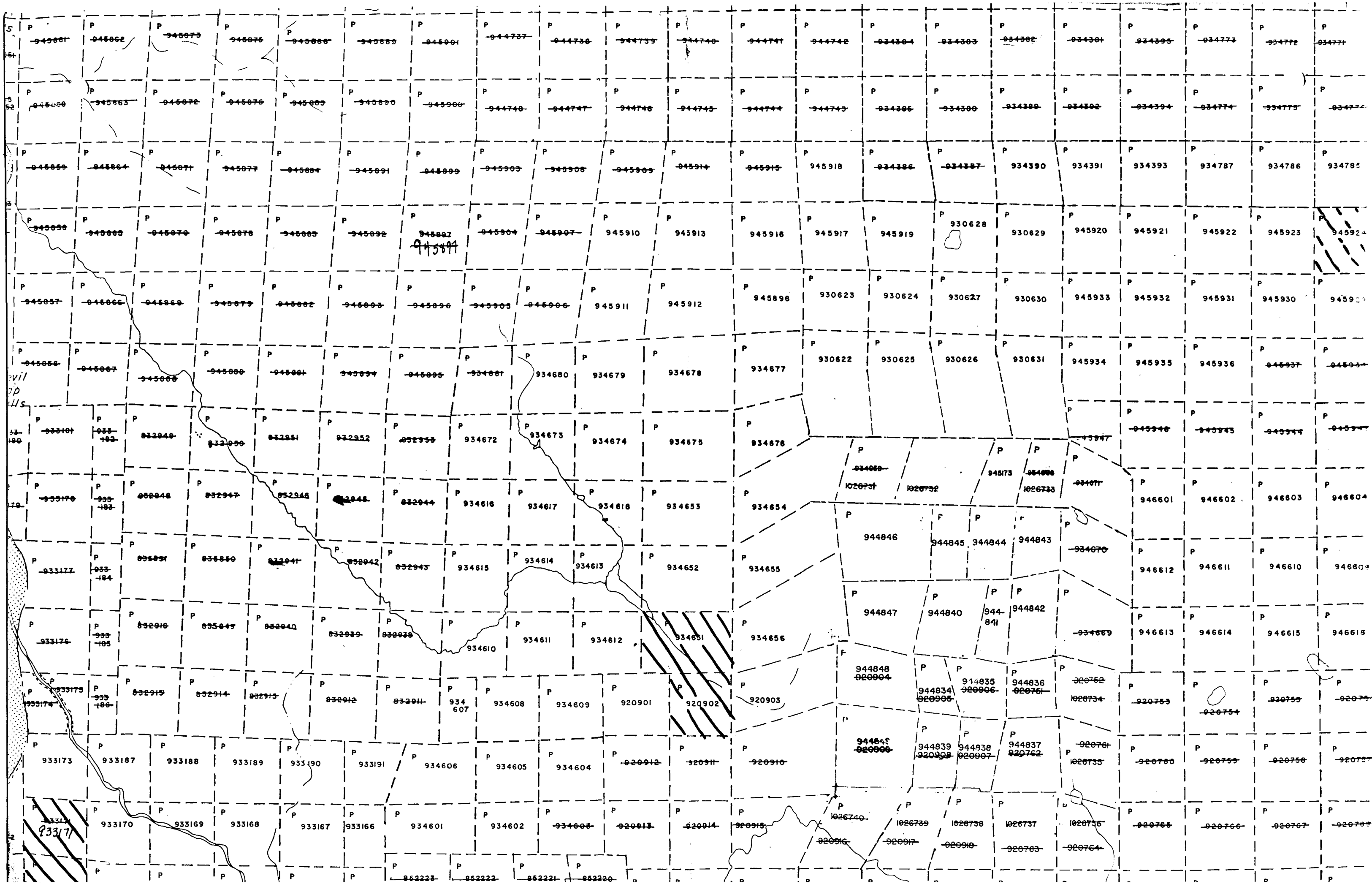
945918
934390
934391
934393
934787
934786
930628
930629
945920
945921
945922
945923
945910
945913
945916
945917
945919
945911
945912
945898
930623
930624
930627
930630
945933
945932
945931
945930
934680
934679
934678
934677
930622
930625
930626
930631
945934
945935
945936
934673
934672
934674
934675
934676
934653
934654
934618
934617
934616
934652
934655
934615
934614
934613
934651
934656
934611
934612
934610
934608
934609
920901
920902
920903
934607
933173
933187
933188
933189
933190
933191
934606
934605
934604
933170
933169
933168
933167
933166
934601
934602
946601
946602
946603
946612
946611
946610
946613
946614
946615
944846
944845
944844
944843
944847
944840
944842
944848
944835
944836
944834
944839
944838
944837
920752
920753
920754
920761
920760
920759
920758
920765
920766
920767
1026734
1026735
1026736
1026737
1026738
1026739
1026740
1026731
1026732
1026733
920916
920917
920918
920763
920764